SUPERVIZOR
D.R.D.P. TIMIŞOARA
BUN DE EXECUȚIE
DATA: 01.04.2022

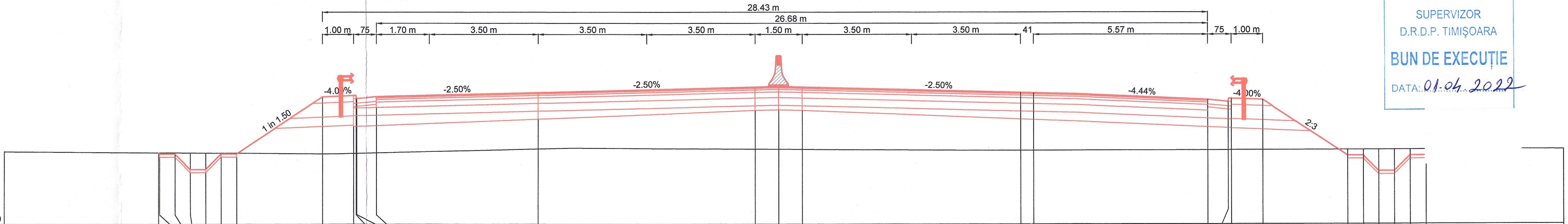

COTE PROIECT	COTE TEREN	DISTANTE
95.30	95.30	-20.00
95.27	95.30	-19.97
95.27	95.30	-19.47
94.77	95.30	-18.97
94.77	95.29	-18.47
95.27	95.29	-17.97
95.27	95.29	-17.47
97.11	95.27	-14.70
97.15	95.28	-13.70
97.15	95.28	-13.62
97.05	95.28	-13.60
97.12	95.30	-12.95
97.25	95.43	-7.75
97.42	95.42	-0.75
97.44	95.41	0.00
97.42	95.41	0.75
97.25	95.38	7.75
97.24	93.00	8.16
97.02	95.39	13.73
96.95	95.39	14.38
97.05	95.39	14.48
97.01	95.39	15.48
95.21	95.40	18.18
95.21	95.40	18.68
94.71	95.40	19.18
94.71	95.40	19.68
95.21	95.40	20.18
95.21	95.40	20.68
	95.41	25.00

KM = 5450.00

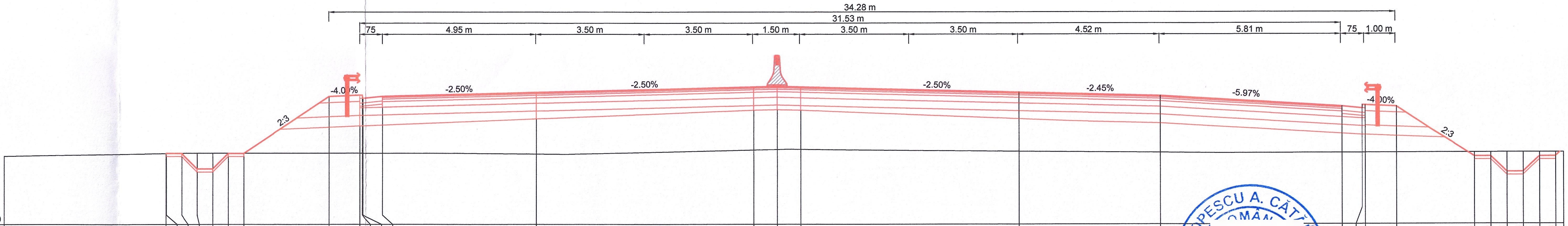

COTE PROIECT	COTE TEREN	DISTANTE
95.29	95.29	-19.72
95.29	95.29	-19.71
95.29	95.29	-19.21
94.79	95.30	-18.71
94.79	95.30	-18.21
95.29	95.30	-17.71
95.29	95.30	-17.21
97.13	95.30	-14.45
97.17	95.30	-13.45
97.17	95.30	-13.37
97.07	95.30	-13.35
97.14	95.30	-12.70
97.26	95.27	-7.75
97.44	95.40	-0.75
97.46	95.41	0.00
97.44	95.42	0.75
97.26	95.35	7.75
97.15	95.32	12.27
96.80	95.30	18.08
96.74	95.30	18.73
96.84	95.30	18.83
96.80	95.30	19.83
95.18	95.31	22.25
95.18	95.31	22.75
94.68	95.31	23.25
94.68	95.31	23.75
95.18	95.31	24.25
95.18	95.31	24.75

KM = 5425.00

POPESCU A. CĂTĂLIN
ROMÂNIA
INGINER VERIFICATOR PROIECTE

SOCIETATEA COMERCIALĂ TOTAL ROAD S.R.L. BUCUREŞTI ROMÂNIA

BENEFICIAR: COMPANIA NATIONALA DE ADMINISTRAREA INFRASTRUCTURII RUTIERE S.A. (C.N.A.I.R. S.A.)

ANTREPRENOR: TODINI CONSTRUZIONI GENERALI S.p.A.

TITLU PROIECT: PROIECTARE SI EXECUȚIE „DRUM DE LEGĂTURĂ AUTOSTRADA A1 ARAD - TIMIȘOARA - DN 69"

FAZA PROIECT: PROIECT TEHNIC DE EXECUTIE (P.T.E.)

CONTRACT NR. 92/7703/01.02.2021

PROIECT NR. 08/2021

SPECIFICATIE	NUME	SEMNATURA
DESENAT	Teh. Sorin VASILACHE	
PROIECTAT	Ing. Mihai COROIAN	
SEF PROIECT	Ing. Catalin GRUIANU	
VERIFICAT	Ing. Adrian NISTOR	

DATA: Martie 2022
MĂRIMEA: A3
SCARĂ: 1:100

TITLU PLANSA: LUCRARI DE INFRASTRUCTURA RUTIERA
PROFILURI TRANSVERSALE CURENTE
DRUM DE LEGATURA DN 69 - A1

NUMAR PLANSA: PTC - 114
PICHET: -

Revizie		
NR.	DATA	DESCRIERE
0	08.2021	Emitere P.T.E.
1	09.2021	Conf. nr.290/DLA1-224
2	02.2022	Conf. ASR 92/93833

PAGE 1 / 1